Specification For Approval

(RoHS Compliance)

Product : Electret Condenser Microphone (Back Electret)

Model: OM8030GF273BFS-HD

Designed	by :	Shirley Xia	12.21.2015
Checked	by :	David Xia	12.21.2015
Approved	by :	Robert Lee	12.21.2015

Customer Name:

Customer Model:

Customer Approval

Address: Unit 2112-2113 , 21/F, International Trade Centre,
11-19 Sha Tsui Road, Tsuen Wan, Hong Kong
Website: www.hk-sound.com
E-mail: sales@hk-sound.com

ISO 9001:2008
ISO14001:2004

Publication History

Version	Description	Date	Author
01	Released from Engineering	12-21-2015	Shirley Xia

Index

1.Test Condition---------- 4

2.Electrical Characteristics---------- 4

3. Typical Frequency Response Curve---------- 4

4. Schematic Diagram---------- 5

5.Measurement System---------- 5

6. Mechanical Characteristics---------- 5

6.1 Dimensions---------- 5

6.2 Weight---------- 5

7. Structure---------- 6

8.Applications---------- 6

9. Reliability Test---------- 7

9.1 Vibration Test---------- 7

9.2 Drop Test---------- 7

9.3 Hi-Temperature Test---------- 7

9.4 Low-Temperature Test---------- 7

9.5 Humidity Test---------- 7

9.6 Temperature Cycle Test---------- 7

9.7 ESD (Electrostatic Discharge)Test---------- 7

10.Packaging---------- 8

11. Storage and Transportation---------- 9

PRODUCT SPECIFICATIONS

1.Test Condition

Standard Conditions	Temperature	Humidity	Air pressure
Environment Conditions	+15℃~ +35℃	40％RH～70%RH	86kPa～106kPa
Arbitration Conditions	+20±2℃	60％RH～70%RH	86kPa～106kPa

2.Electrical Characteristics

Parameter	Symbol	Condition	Limits			Unit
			Min.	Center	Max.	
Sensitivity	S	f=1KHZ,Pin=1Pa 0dB=1V/Pa, L=50cm	-30	-27	-24	dB
Directivity	D(θ)	Omni-directional				
Output impedance	ZOUT	f=1KHZ			2.2	KΩ
Current Consumption	IDSS	VS=3.0V,RL=2.2KΩ			500	uA
Signal to Noise Ratio	S/N	f=1KHZ,Pin=1Pa (A-weighted curve)	77			dB
Decreasing Voltage	△S	VS=3.0V to 2.0V			-3	dB
Operating voltage range	VS		1.0		10	V
Maximum input S.P.L	S	THD<3%			110	dB

3. Typical Frequency Response Curve

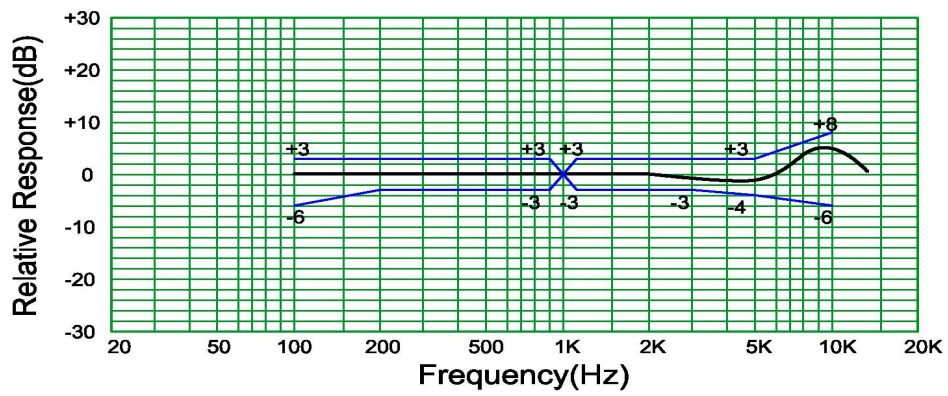

4. Schematic Diagram:

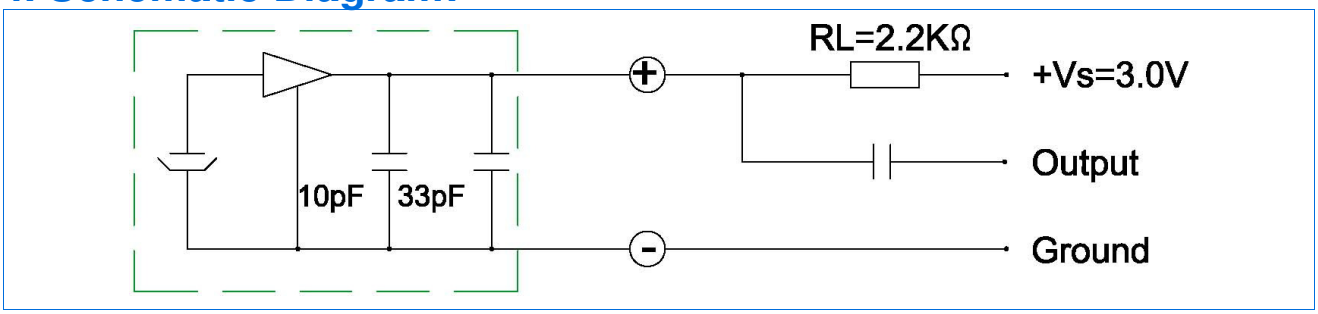

5.Measurement System:

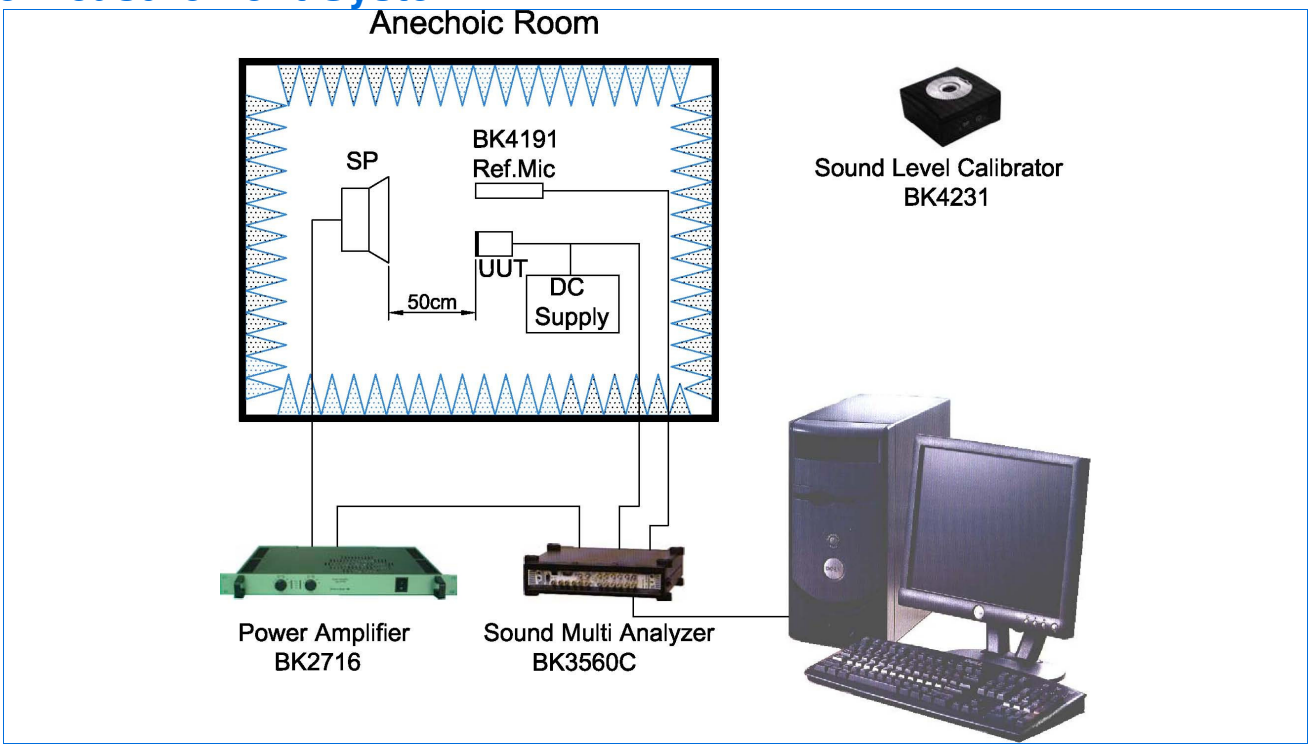

6. Mechanical Characteristics:

6.1 Dimensions(Unit:mm):

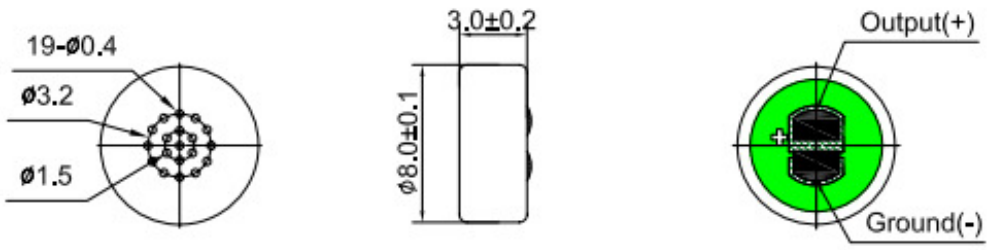

6.2 Weight: less than 0.3g.

7. Structure:

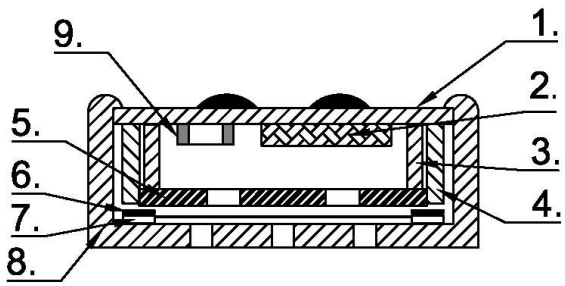

Item NO.	Part Name	Qty
1.	P.C.B	1
2.	FET	1
3.	Metal Ring	1
4.	Plastic Ring	1
5.	Back Plate	1
6.	Spacer	1
7.	Diaphragm	1
8.	Case	1
9.	Capacitor	2

8.Applications

High temperature and static may destroy microphone, So handle it carefully when use:

a. The soldering iron shall be used below 90W.
b. The temperature of soldering irons must be limited as 360±10℃.
c. The soldering duration of each terminal shall be within 2 seconds.
d. The pin holes after soldering shall be avoided.
e. Keep ECM far away from static electricity.

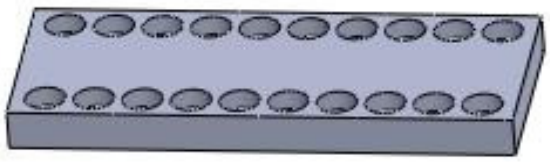

9. Reliability Test:

After any following tests, the sensitivity of the microphone shall not change more than ± 3dB from initial value, and shall keep its initial operation and appearance.

9.1	Vibration Test	To be no interference in operation after vibrations,10Hz to 55Hz for 1 minute full amplitude 1.52 mm, for 2 hours at three axises in state of standard packing.
9.2	Drop Test	To be no interference in operation after dropped to concrete floor each one time from 1 meter height at three directions in state of outer packing. (The measurement to be done after 2 hours of conditioning at 22℃±5℃,R.H40%~ R.H 70%)
9.3	Hi-Temperature Test	Exposure at +70℃ for 200 hours (The measurement to be done after 2 hours of conditioning at 22℃±5℃,R.H40%~ R.H 70%)
9.4	Low-Temperature Test	Exposure at -25℃ for 200 hours (The measurement to be done after 2 hours of conditioning at 22℃±5℃,R.H40%~ R.H 70%)
9.5	Humidity Test	Exposure at +40℃ and 90%~95% relative humidity for 200 hours. (The measurement to be done after 2 hours of conditioning at 22℃±5℃,R.H40%~ R.H 70%)
9.6	Temperature Cycle Test	Exposure at -25℃ for 30 minutes, at 20℃ for 10 minutes, at +70℃ for 30 minutes, at 20℃ for 10 minutes,5 cycles. (The measurement to be done after 2 hours of conditioning at 22℃±5℃,R.H40%~ R.H 70%)
9.7	ESD (Electrostatic Discharge)Test	According to the third item of the standard of IEC 61000 1.Contact discharge Charge 6000V DC to the capacitor with 150pF, and discharge the output of the MIC ten times through the resistance of 330Ω, then check and test it. 2.Air discharge Charge 8000V DC to the capacitor with 150pF, and discharge the sound hole of the MIC ten times through the resistance of 330Ω, then check and test it.

10.Packaging:

	Drawing	Qty (pcs.)	Size(mm) L×W×H	Material
Packing	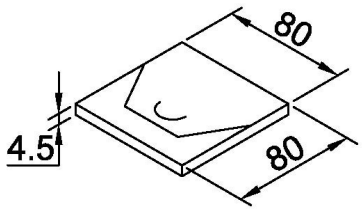	100	80×80×4.5	Paper
Middle Package	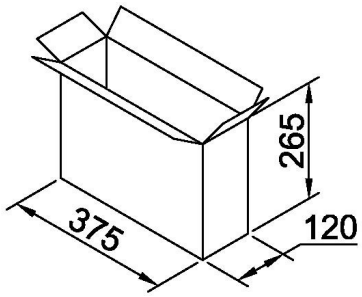	15000 (150×100)	375×120×265	Paper
Outer Package	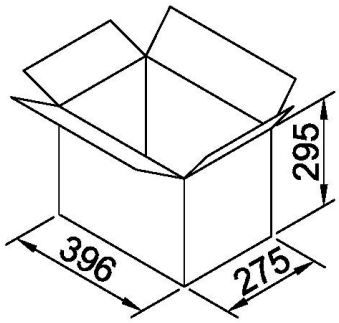	30000 (2×15000)	396×275×295	Paper

11. Storage and Transportation

11.1 Keep MIC in warehouse with less than 90 % humidity and without sudden temperature change, acid air, any other harmful air or strong magnetic field.

11.2 The MIC with normal pack can be transported by ordinary conveyances. Please protect products against moist, shock, sunburn and pressure during transportation.

11.3 Storage Temperature Range ： -40℃～+85℃

11.4 Operating Temperature Range ： -20℃～+70℃